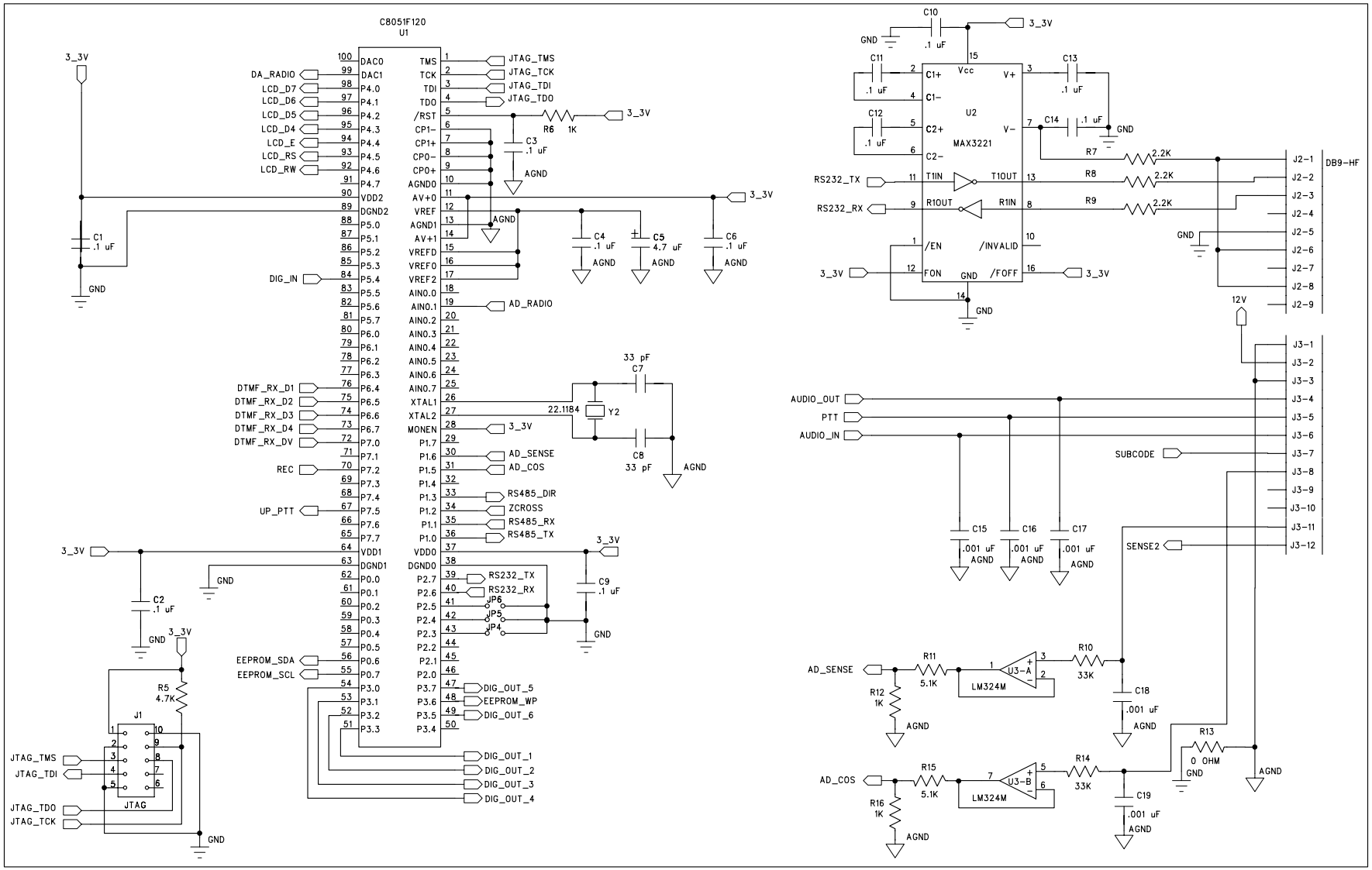
C8051F120
U1
DAC0
DAC1
P4.0
P4.1
P4.2
P4.3
P4.4
P4.5
P4.6
P4.7
VDD2
DGND2
P5.0
P5.1
P5.2
P5.3
P5.4
P5.5
P5.6
P5.7
P6.0
P6.1
P6.2
P6.3
P6.4
P6.5
P6.6
P6.7
P7.0
P7.1
P7.2
P7.3
P7.4
P7.5
P7.6
P7.7
VDD1
DGND1
P0.0
P0.1
P0.2
P0.3
P0.4
P0.5
P0.6
P0.7
P3.0
P3.1
P3.2
P3.3
TMS
TCK
TDI
TDO
/RST
CP1-
CP1+
CP0-
CP0+
AGND0
AV+0
VREF
AGND1
AV+1
VREFD
VREF0
VREF2
AIN0.0
AIN0.1
AIN0.2
AIN0.3
AIN0.4
AIN0.5
AIN0.6
AIN0.7
XTAL1
XTAL2
MONEN
P1.7
P1.6
P1.5
P1.4
P1.3
P1.2
P1.1
P1.0
VDD0
DGND0
P2.7
P2.6
P2.5
P2.4
P2.3
P2.2
P2.1
P2.0
P3.7
P3.6
P3.5
P3.4
3_3V
DA_RADIO
LCD_D7
LCD_D6
LCD_D5
LCD_D4
LCD_E
LCD_RS
LCD_RW
DIG_IN
DTMF_RX_D1
DTMF_RX_D2
DTMF_RX_D3
DTMF_RX_D4
DTMF_RX_DV
REC
UP_PTT
EEPROM_SDA
EEPROM_SCL
JTAG_TMS
JTAG_TDI
JTAG_TDO
JTAG_TCK
DIG_OUT_5
EEPROM_WP
DIG_OUT_6
DIG_OUT_1
DIG_OUT_2
DIG_OUT_3
DIG_OUT_4
AD_RADIO
AD_SENSE
AD_COS
RS485_DIR
ZCROSS
RS485_RX
RS485_TX
RS232_TX
RS232_RX
R6 1K
C3 .1 uF
C1 .1 uF
C2 .1 uF
C4 .1 uF
C5 4.7 uF
C6 .1 uF
C7 33 pF
C8 33 pF
Y2 22.1184
C9 .1 uF
JP6
JP5
JP4
R5 4.7K
J1
JTAG
GND
AGND
C10 .1 uF
C11 .1 uF
C12 .1 uF
C13 .1 uF
C14 .1 uF
U2
MAX3221
Vcc
C1+
C1-
C2+
C2-
V+
V-
T1IN
R1OUT
T1OUT
R1IN
/EN
FON
/INVALID
/FOFF
R7 2.2K
R8 2.2K
R9 2.2K
DB9-HF
J2-1
J2-2
J2-3
J2-4
J2-5
J2-6
J2-7
J2-8
J2-9
12V
J3-1
J3-2
J3-3
J3-4
J3-5
J3-6
J3-7
J3-8
J3-9
J3-10
J3-11
J3-12
AUDIO_OUT
PTT
AUDIO_IN
SUBCODE
SENSE2
C15 .001 uF
C16 .001 uF
C17 .001 uF
R11 5.1K
R12 1K
R10 33K
C18 .001 uF
U3-A
LM324M
R15 5.1K
R16 1K
R14 33K
C19 .001 uF
U3-B
R13 0 OHM

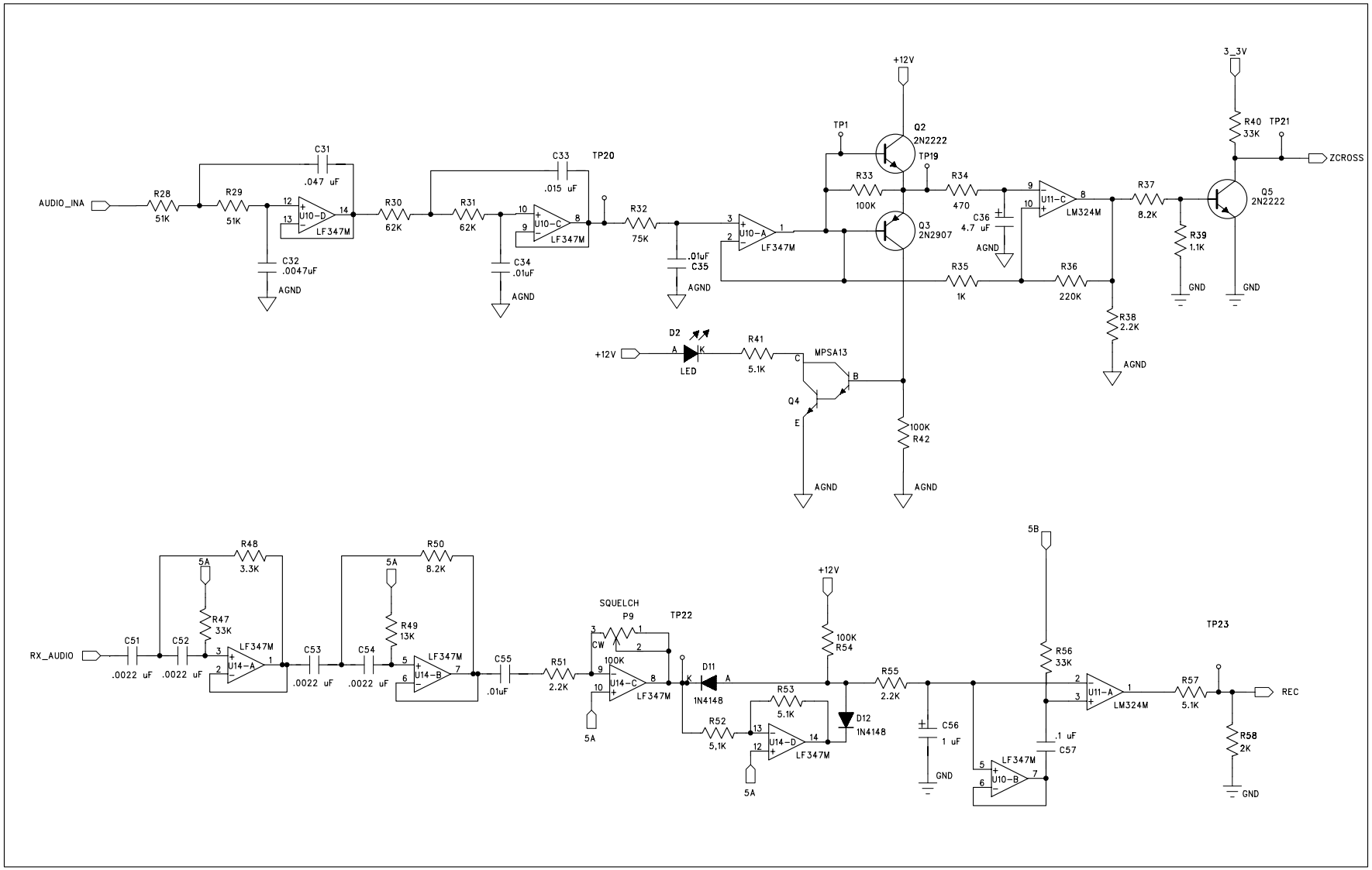
AUDIO_INA
R28
51K
R29
51K
C31
.047 uF
U10-D
LF347M
C32
.0047uF
AGND
R30
62K
R31
62K
C33
.015 uF
U10-C
LF347M
C34
.01uF
AGND
TP20
R32
75K
.01uF
C35
AGND
U10-A
LF347M
+12V
TP1
Q2
2N2222
TP19
R33
100K
Q3
2N2907
R34
470
C36
4.7 uF
AGND
U11-C
LM324M
R35
1K
R36
220K
R37
8.2K
R38
2.2K
AGND
R39
1.1K
GND
3_3V
R40
33K
TP21
ZCROSS
Q5
2N2222
GND
+12V
D2
A
K
LED
R41
5.1K
MPSA13
C
B
Q4
E
AGND
100K
R42
AGND
RX_AUDIO
C51
.0022 uF
C52
.0022 uF
5A
R48
3.3K
R47
33K
LF347M
U14-A
C53
.0022 uF
5A
R50
8.2K
R49
13K
LF347M
U14-B
C54
.0022 uF
C55
.01uF
R51
2.2K
SQUELCH
P9
CW
100K
U14-C
LF347M
5A
TP22
D11
1N4148
K
A
R52
5.1K
R53
5.1K
U14-D
LF347M
5A
D12
1N4148
+12V
100K
R54
R55
2.2K
C56
1 uF
GND
5B
R56
33K
.1 uF
C57
LF347M
U10-B
U11-A
LM324M
TP23
R57
5.1K
REC
R58
2K
GND

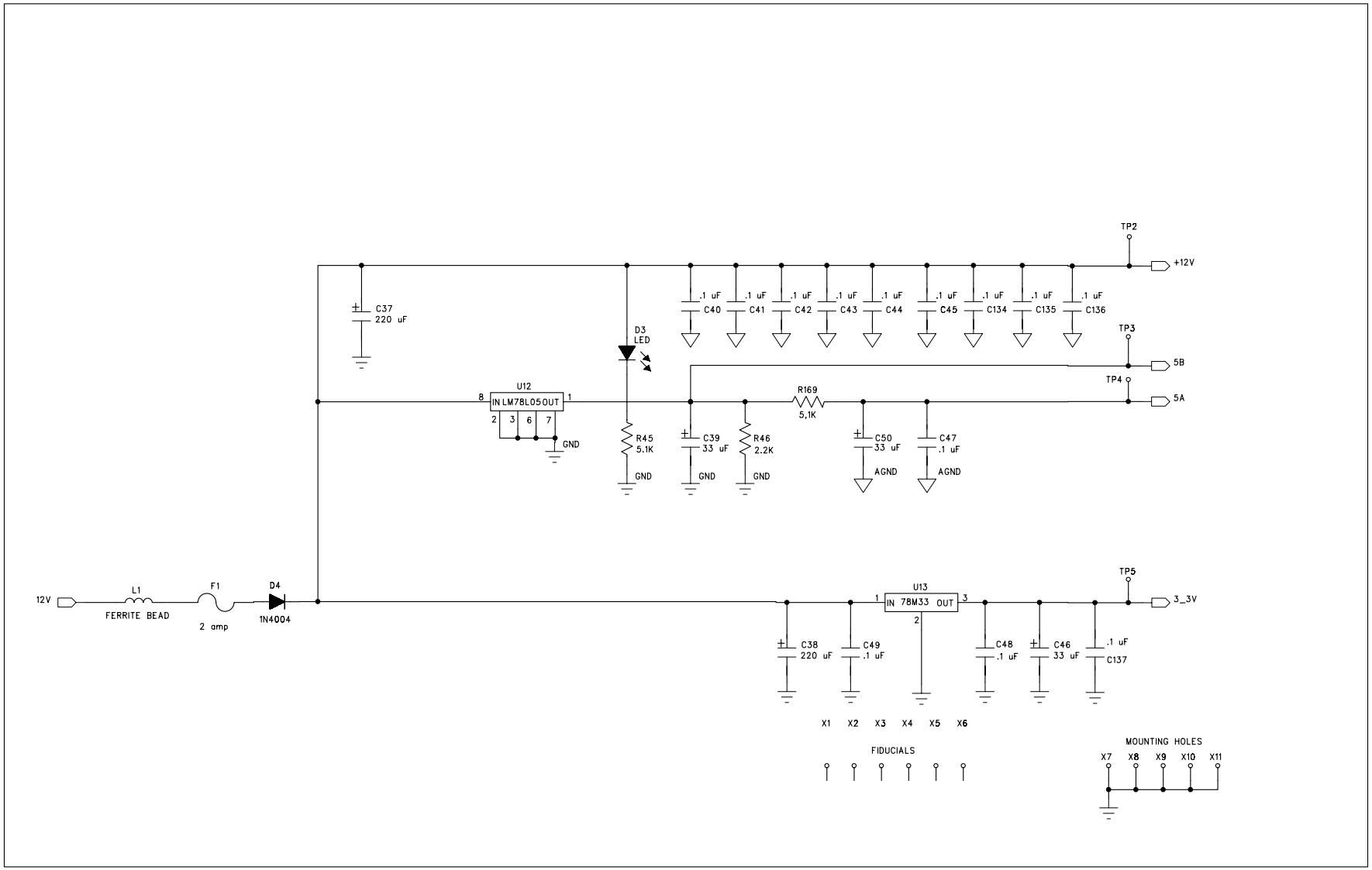
TP2
+12V
C37
220 uF
.1 uF
C40
C41
C42
C43
C44
C45
C134
C135
C136
D3
LED
TP3
5B
TP4
5A
U12
IN LM78L05 OUT
8
1
2
3
6
7
GND
R169
5,1K
R45
5.1K
C39
33 uF
R46
2.2K
C50
33 uF
C47
.1 uF
AGND
12V
L1
FERRITE BEAD
F1
2 amp
D4
1N4004
TP5
3_3V
U13
IN 78M33 OUT
C38
220 uF
C49
.1 uF
C48
.1 uF
C46
33 uF
C137
X1
X2
X3
X4
X5
X6
FIDUCIALS
MOUNTING HOLES
X7
X8
X9
X10
X11

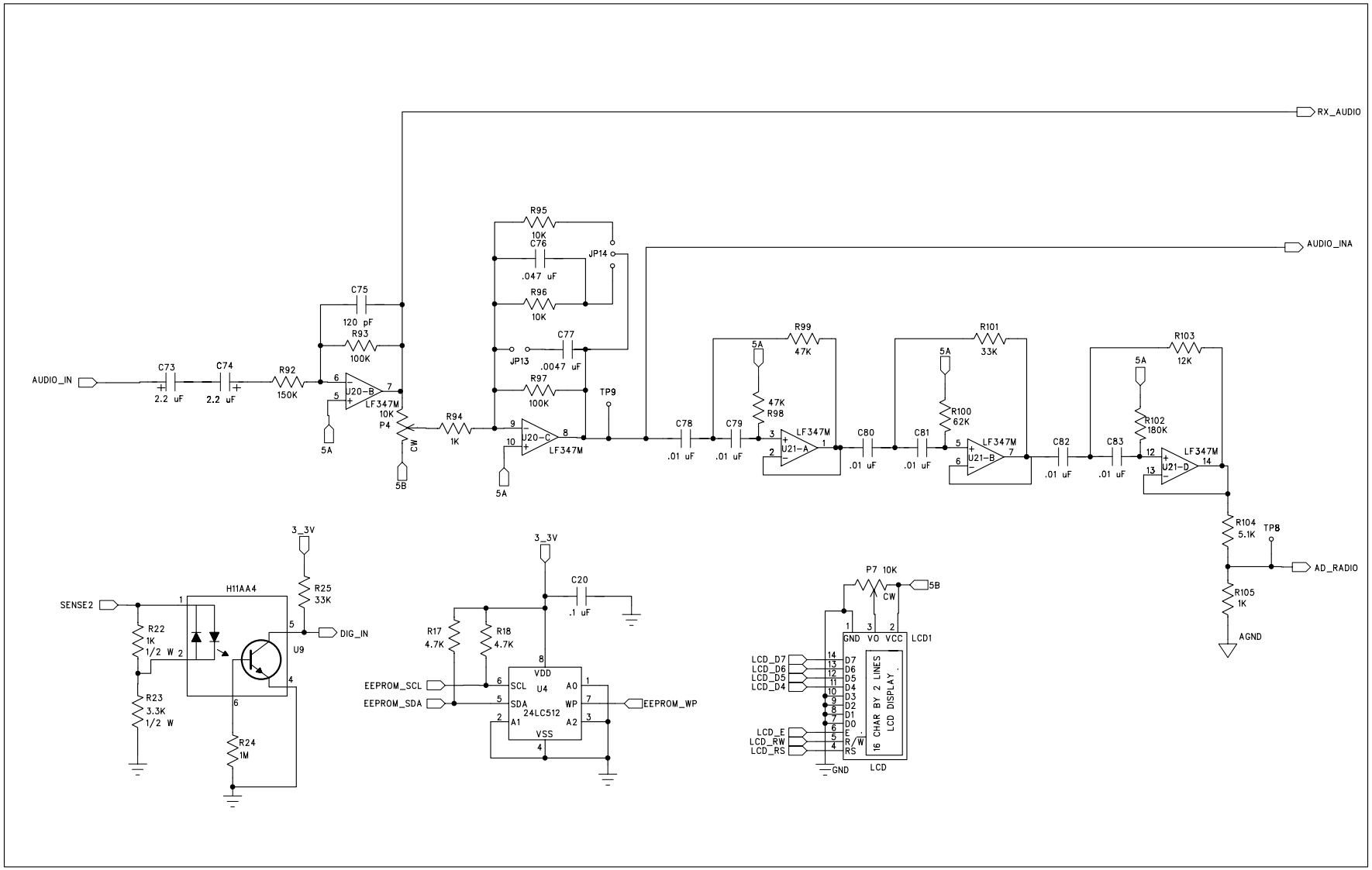
RX_AUDIO
AUDIO_INA
AUDIO_IN
C73
2.2 uF
C74
2.2 uF
R92
150K
C75
120 pF
R93
100K
U20-B
LF347M
5A
10K
P4
CW
5B
R94
1K
R95
10K
C76
.047 uF
JP14
R96
10K
C77
.0047 uF
JP13
R97
100K
U20-C
LF347M
5A
TP9
C78
.01 uF
C79
.01 uF
R99
47K
47K
R98
U21-A
LF347M
C80
.01 uF
R101
33K
R100
62K
C81
.01 uF
U21-B
LF347M
C82
.01 uF
R103
12K
R102
180K
C83
.01 uF
U21-D
LF347M
R104
5.1K
TP8
AD_RADIO
R105
1K
AGND
3_3V
R25
33K
H11AA4
SENSE2
R22
1K
1/2 W
R23
3.3K
1/2 W
R24
1M
U9
DIG_IN
3_3V
C20
.1 uF
R17
4.7K
R18
4.7K
EEPROM_SCL
EEPROM_SDA
VDD
SCL
SDA
A1
U4
24LC512
VSS
A0
WP
A2
EEPROM_WP
P7 10K
5B
CW
GND
VO
VCC
LCD1
LCD_D7
LCD_D6
LCD_D5
LCD_D4
LCD_E
LCD_RW
LCD_RS
D7
D6
D5
D4
D3
D2
D1
D0
E
R/W
RS
16 CHAR BY 2 LINES
LCD DISPLAY
GND
LCD

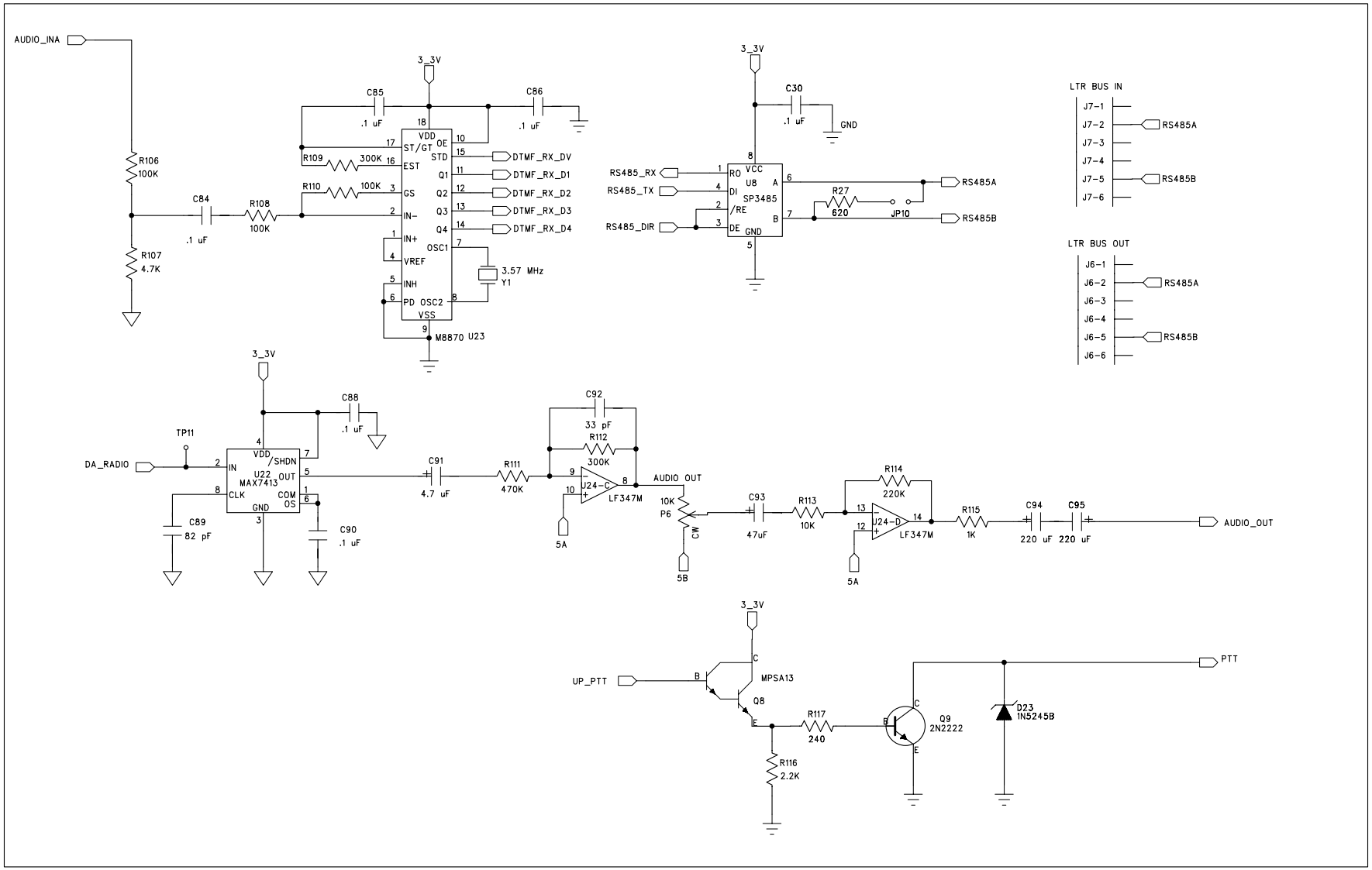
AUDIO_INA
R106
100K
R107
4.7K
C84
.1 uF
R108
100K
3_3V
C85
.1 uF
C86
.1 uF
R109
300K
R110
100K
VDD
ST/GT
EST
GS
IN-
IN+
VREF
INH
PD
OSC2
VSS
OE
STD
Q1
Q2
Q3
Q4
OSC1
DTMF_RX_DV
DTMF_RX_D1
DTMF_RX_D2
DTMF_RX_D3
DTMF_RX_D4
3.57 MHz
Y1
M8870 U23
3_3V
C30
.1 uF
GND
RS485_RX
RS485_TX
RS485_DIR
RO
DI
/RE
DE
VCC
GND
U8
SP3485
A
B
R27
620
JP10
RS485A
RS485B
LTR BUS IN
J7-1
J7-2
J7-3
J7-4
J7-5
J7-6
RS485A
RS485B
LTR BUS OUT
J6-1
J6-2
J6-3
J6-4
J6-5
J6-6
RS485A
RS485B
3_3V
C88
.1 uF
TP11
DA_RADIO
IN
VDD
/SHDN
U22
MAX7413
OUT
CLK
COM
OS
GND
C89
82 pF
C90
.1 uF
C91
4.7 uF
R111
470K
C92
33 pF
R112
300K
J24-C
LF347M
5A
AUDIO_OUT
10K
P6
CW
5B
C93
47uF
R113
10K
R114
220K
J24-D
LF347M
5A
R115
1K
C94
220 uF
C95
220 uF
AUDIO_OUT
3_3V
UP_PTT
B
C
E
MPSA13
Q8
R117
240
R116
2.2K
Q9
2N2222
D23
1N5245B
PTT

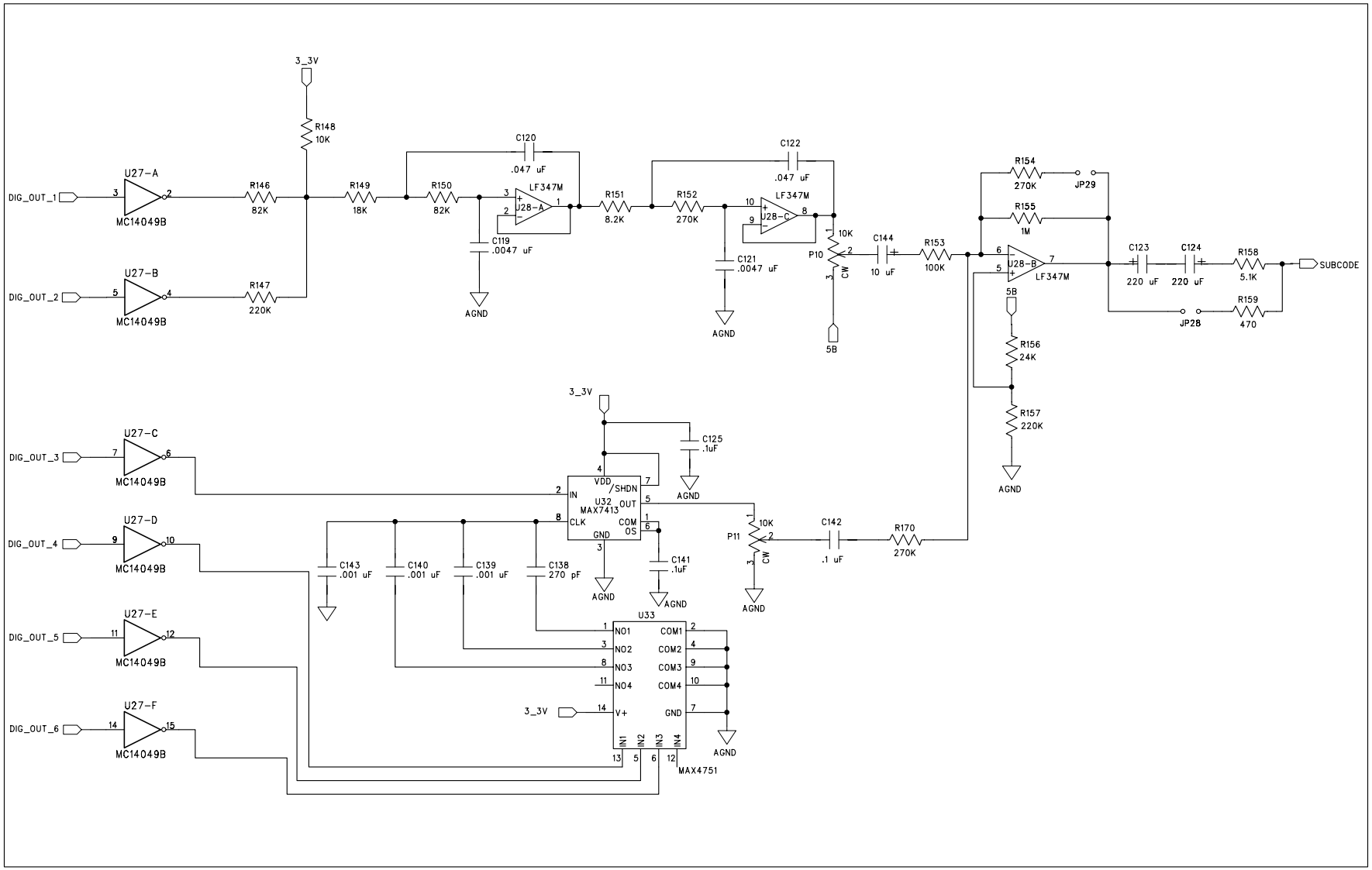
3_3V
R148
10K
DIG_OUT_1
U27-A
MC14049B
R146
82K
R149
18K
R150
82K
C120
.047 uF
LF347M
U28-A
C119
.0047 uF
AGND
R151
8.2K
R152
270K
C122
.047 uF
LF347M
U28-C
C121
.0047 uF
AGND
P10
10K
CW
5B
C144
10 uF
R153
100K
R154
270K
JP29
R155
1M
U28-B
LF347M
C123
220 uF
C124
220 uF
R158
5.1K
SUBCODE
JP28
R159
470
5B
R156
24K
R157
220K
AGND
DIG_OUT_2
U27-B
MC14049B
R147
220K
3_3V
C125
.1uF
AGND
DIG_OUT_3
U27-C
MC14049B
VDD
/SHDN
IN
U32
OUT
MAX7413
CLK
COM
OS
GND
AGND
C141
.1uF
AGND
DIG_OUT_4
U27-D
MC14049B
C143
.001 uF
C140
.001 uF
C139
.001 uF
C138
270 pF
P11
10K
CW
C142
.1 uF
R170
270K
AGND
DIG_OUT_5
U27-E
MC14049B
U33
NO1
NO2
NO3
NO4
COM1
COM2
COM3
COM4
3_3V
V+
GND
AGND
DIG_OUT_6
U27-F
MC14049B
IN1
IN2
IN3
IN4
MAX4751