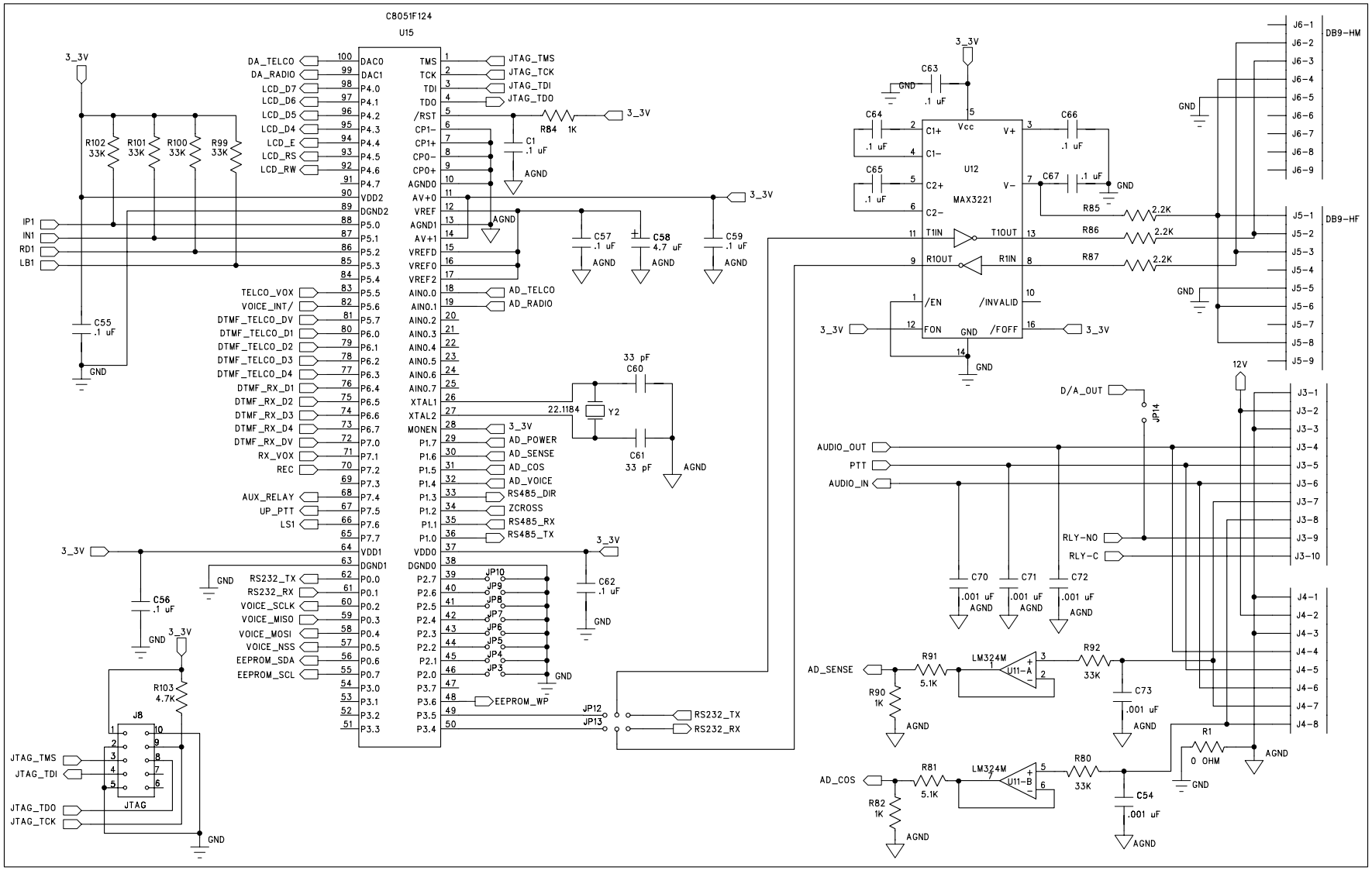
C8051F124
U15
DAC0
DAC1
P4.0
P4.1
P4.2
P4.3
P4.4
P4.5
P4.6
P4.7
VDD2
DGND2
P5.0
P5.1
P5.2
P5.3
P5.4
P5.5
P5.6
P5.7
P6.0
P6.1
P6.2
P6.3
P6.4
P6.5
P6.6
P6.7
P7.0
P7.1
P7.2
P7.3
P7.4
P7.5
P7.6
P7.7
VDD1
DGND1
P0.0
P0.1
P0.2
P0.3
P0.4
P0.5
P0.6
P0.7
P3.0
P3.1
P3.2
P3.3
TMS
TCK
TDI
TDO
/RST
CP1-
CP1+
CP0-
CP0+
AGND0
AV+0
VREF
AGND1
AV+1
VREFD
VREF0
VREF2
AIN0.0
AIN0.1
AIN0.2
AIN0.3
AIN0.4
AIN0.5
AIN0.6
AIN0.7
XTAL1
XTAL2
MONEN
P1.7
P1.6
P1.5
P1.4
P1.3
P1.2
P1.1
P1.0
VDD0
DGND0
P2.7
P2.6
P2.5
P2.4
P2.3
P2.2
P2.1
P2.0
P3.7
P3.6
P3.5
P3.4
DA_TELCO
DA_RADIO
LCD_D7
LCD_D6
LCD_D5
LCD_D4
LCD_E
LCD_RS
LCD_RW
TELCO_VOX
VOICE_INT/
DTMF_TELCO_DV
DTMF_TELCO_D1
DTMF_TELCO_D2
DTMF_TELCO_D3
DTMF_TELCO_D4
DTMF_RX_D1
DTMF_RX_D2
DTMF_RX_D3
DTMF_RX_D4
DTMF_RX_DV
RX_VOX
REC
AUX_RELAY
UP_PTT
LS1
RS232_TX
RS232_RX
VOICE_SCLK
VOICE_MISO
VOICE_MOSI
VOICE_NSS
EEPROM_SDA
EEPROM_SCL
JTAG_TMS
JTAG_TCK
JTAG_TDI
JTAG_TDO
AD_TELCO
AD_RADIO
3_3V
AD_POWER
AD_SENSE
AD_COS
AD_VOICE
RS485_DIR
ZCROSS
RS485_RX
RS485_TX
EEPROM_WP
RS232_TX
RS232_RX
R84 1K
C1 .1 uF
AGND
C57 .1 uF
C58 4.7 uF
C59 .1 uF
C60 33 pF
C61 33 pF
Y2 22.1184
C62 .1 uF
C55 .1 uF
C56 .1 uF
R102 33K
R101 33K
R100 33K
R99 33K
R103 4.7K
JP3
JP4
JP5
JP6
JP7
JP8
JP9
JP10
JP12
JP13
J8
JTAG
GND
IP1
IN1
RD1
LB1
U12
MAX3221
Vcc
C1+
C1-
C2+
C2-
V+
V-
T1IN
R1OUT
/EN
FON
T1OUT
R1IN
/INVALID
/FOFF
C63 .1 uF
C64 .1 uF
C65 .1 uF
C66 .1 uF
C67 .1 uF
R85 2.2K
R86 2.2K
R87 2.2K
DB9-HM
DB9-HF
J6-1
J6-2
J6-3
J6-4
J6-5
J6-6
J6-7
J6-8
J6-9
J5-1
J5-2
J5-3
J5-4
J5-5
J5-6
J5-7
J5-8
J5-9
12V
D/A_OUT
JP14
AUDIO_OUT
PTT
AUDIO_IN
RLY-NO
RLY-C
J3-1
J3-2
J3-3
J3-4
J3-5
J3-6
J3-7
J3-8
J3-9
J3-10
C70 .001 uF
C71 .001 uF
C72 .001 uF
J4-1
J4-2
J4-3
J4-4
J4-5
J4-6
J4-7
J4-8
R91 5.1K
R90 1K
LM324M
U11-A
R92 33K
C73 .001 uF
R1 0 OHM
R81 5.1K
R82 1K
U11-B
R80 33K
C54 .001 uF

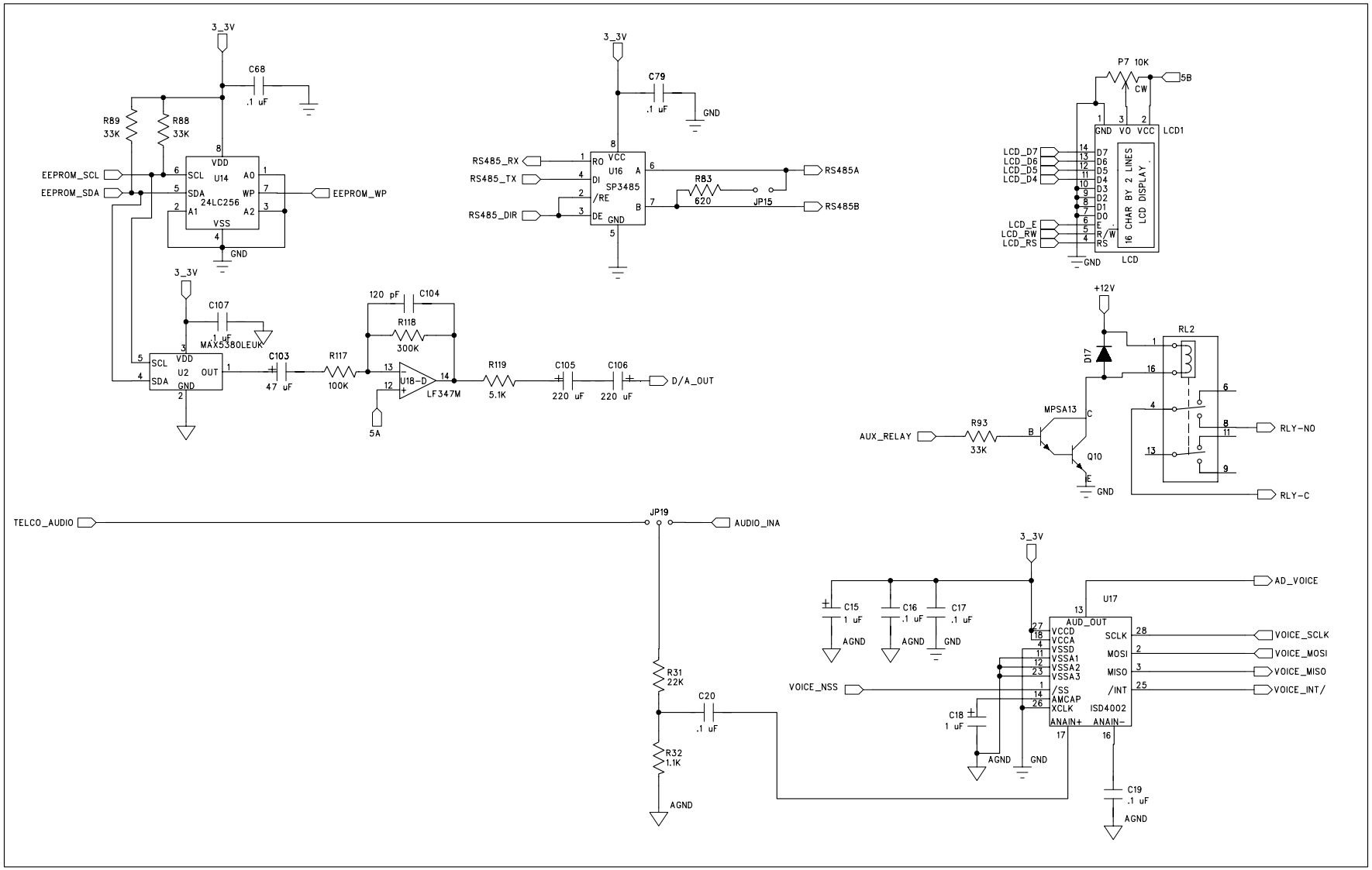
3_3V
C68
.1 uF
R89
33K
R88
33K
EEPROM_SCL
EEPROM_SDA
VDD
SCL
SDA
U14
24LC256
A0
WP
A1
A2
VSS
EEPROM_WP
GND
C79
RS485_RX
RS485_TX
RS485_DIR
RO
DI
/RE
DE
VCC
U16
SP3485
A
B
GND
R83
620
JP15
RS485A
RS485B
P7 10K
5B
CW
GND
VO
VCC
LCD1
LCD_D7
LCD_D6
LCD_D5
LCD_D4
LCD_E
LCD_RW
LCD_RS
D7
D6
D5
D4
D3
D2
D1
D0
E
R/W
RS
16 CHAR BY 2 LINES
LCD DISPLAY
LCD
C107
.1 uF
MAX5380LEUK
U2
OUT
C103
47 uF
R117
100K
120 pF
C104
R118
300K
U18-D
LF347M
5A
R119
5.1K
C105
220 uF
C106
220 uF
D/A_OUT
+12V
D17
RL2
MPSA13
Q10
AUX_RELAY
R93
33K
RLY-NO
RLY-C
TELCO_AUDIO
JP19
AUDIO_INA
R31
22K
C20
.1 uF
R32
1.1K
AGND
C15
1 uF
C16
.1 uF
C17
.1 uF
U17
AUD_OUT
VCCD
VCCA
VSSD
VSSA1
VSSA2
VSSA3
/SS
AMCAP
XCLK
ANAIN+
ANAIN-
ISD4002
SCLK
MOSI
MISO
/INT
AD_VOICE
VOICE_SCLK
VOICE_MOSI
VOICE_MISO
VOICE_INT/
VOICE_NSS
C18
1 uF
C19
.1 uF

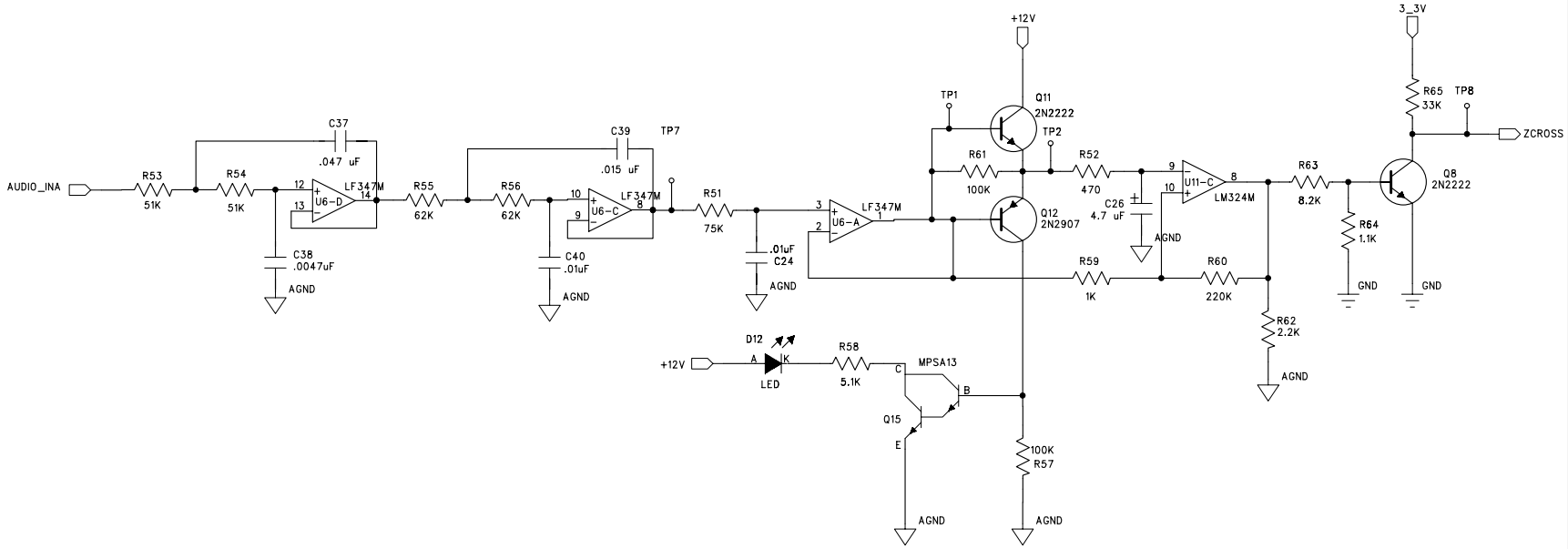
AUDIO_INA
R53
51K
R54
51K
C37
.047 uF
U6-D
LF347M
C38
.0047uF
AGND
R55
62K
R56
62K
C39
.015 uF
TP7
U6-C
LF347M
C40
.01uF
AGND
R51
75K
.01uF
C24
AGND
U6-A
LF347M
+12V
TP1
Q11
2N2222
TP2
R61
100K
Q12
2N2907
R52
470
C26
4.7 uF
AGND
U11-C
LM324M
R59
1K
R60
220K
R62
2.2K
AGND
R63
8.2K
R64
1.1K
GND
3_3V
R65
33K
TP8
ZCROSS
Q8
2N2222
GND
+12V
D12
LED
R58
5.1K
MPSA13
Q15
100K
R57
AGND
AGND

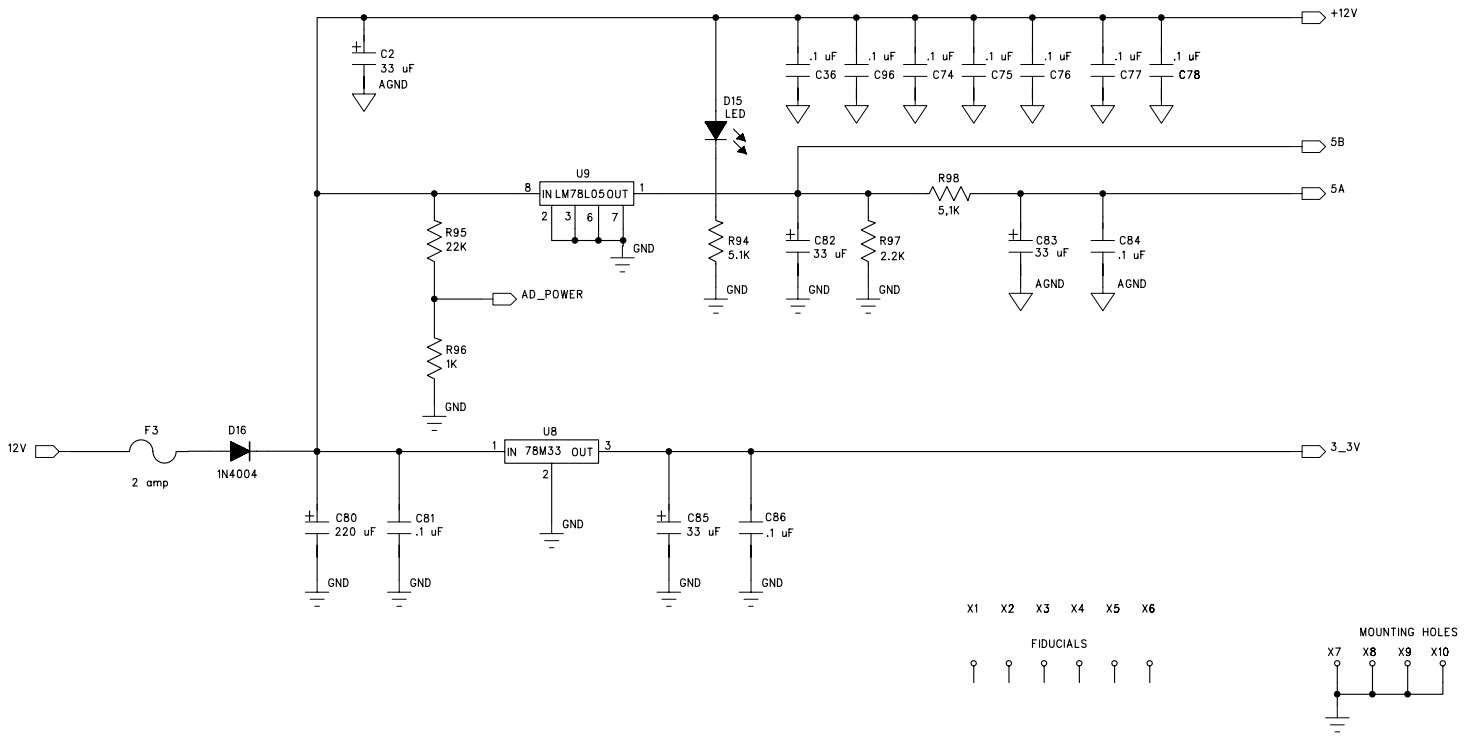
+12V
C2
33 uF
AGND
.1 uF
C36
C96
C74
C75
C76
C77
C78
D15
LED
5B
U9
IN LM78L05 OUT
8
1
2
3
6
7
GND
R98
5,1K
5A
R95
22K
R94
5.1K
C82
33 uF
R97
2.2K
C83
33 uF
C84
.1 uF
AGND
AD_POWER
R96
1K
12V
F3
2 amp
D16
1N4004
U8
IN 78M33 OUT
3_3V
C80
220 uF
C81
.1 uF
C85
33 uF
C86
.1 uF
X1
X2
X3
X4
X5
X6
FIDUCIALS
MOUNTING HOLES
X7
X8
X9
X10

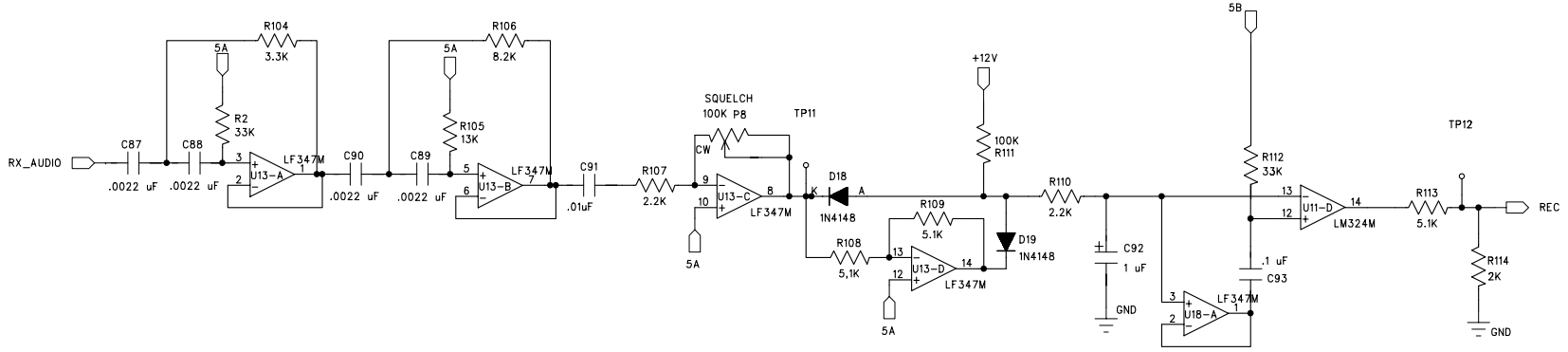
RX_AUDIO
C87
.0022 uF
C88
.0022 uF
R104
3.3K
5A
R2
33K
U13-A
LF347M
C90
.0022 uF
R106
8.2K
5A
R105
13K
C89
.0022 uF
U13-B
LF347M
C91
.01uF
R107
2.2K
SQUELCH
100K P8
CW
U13-C
LF347M
5A
TP11
D18
1N4148
K
A
R108
5.1K
R109
5.1K
U13-D
LF347M
5A
D19
1N4148
+12V
100K
R111
R110
2.2K
C92
1 uF
GND
5B
R112
33K
U18-A
LF347M
.1 uF
C93
U11-D
LM324M
R113
5.1K
TP12
R114
2K
GND
REC

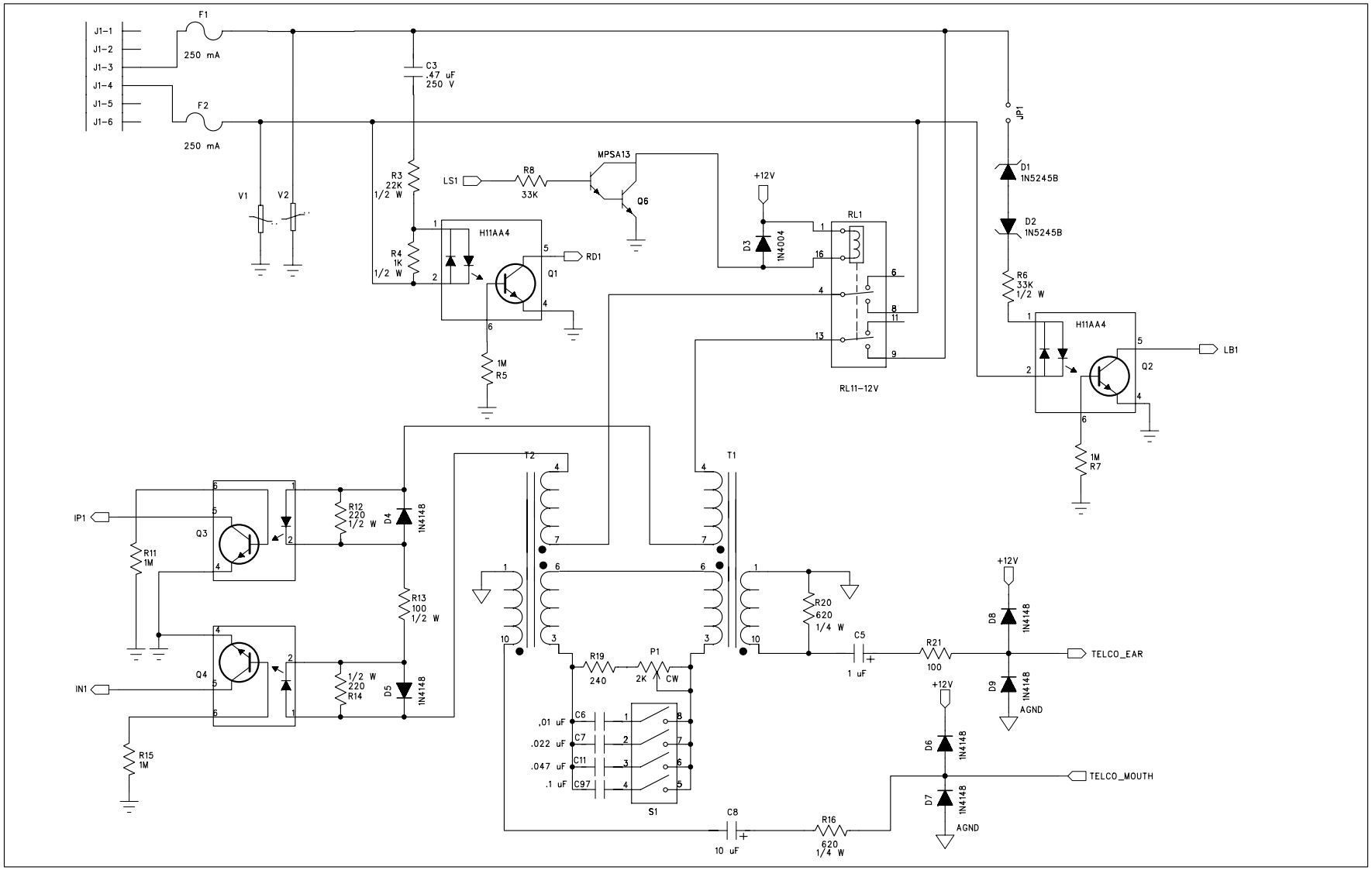
J1-1
J1-2
J1-3
J1-4
J1-5
J1-6
F1
250 mA
F2
250 mA
V1
V2
C3
.47 uF
250 V
R3
22K
1/2 W
R4
1K
1/2 W
H11AA4
Q1
RD1
1M
R5
LS1
R8
33K
MPSA13
Q6
+12V
D3
1N4004
RL1
RL11-12V
JP1
D1
1N5245B
D2
1N5245B
R6
33K
1/2 W
H11AA4
Q2
LB1
1M
R7
IP1
IN1
Q3
Q4
R11
1M
R15
1M
R12
220
1/2 W
D4
1N4148
R13
100
1/2 W
R14
220
1/2 W
D5
1N4148
T2
T1
R19
240
P1
2K
CW
C6
.01 uF
C7
.022 uF
C11
.047 uF
C97
.1 uF
S1
C8
10 uF
R16
620
1/4 W
R20
620
1/4 W
C5
1 uF
R21
100
TELCO_EAR
D8
1N4148
D9
1N4148
AGND
D6
1N4148
D7
1N4148
TELCO_MOUTH

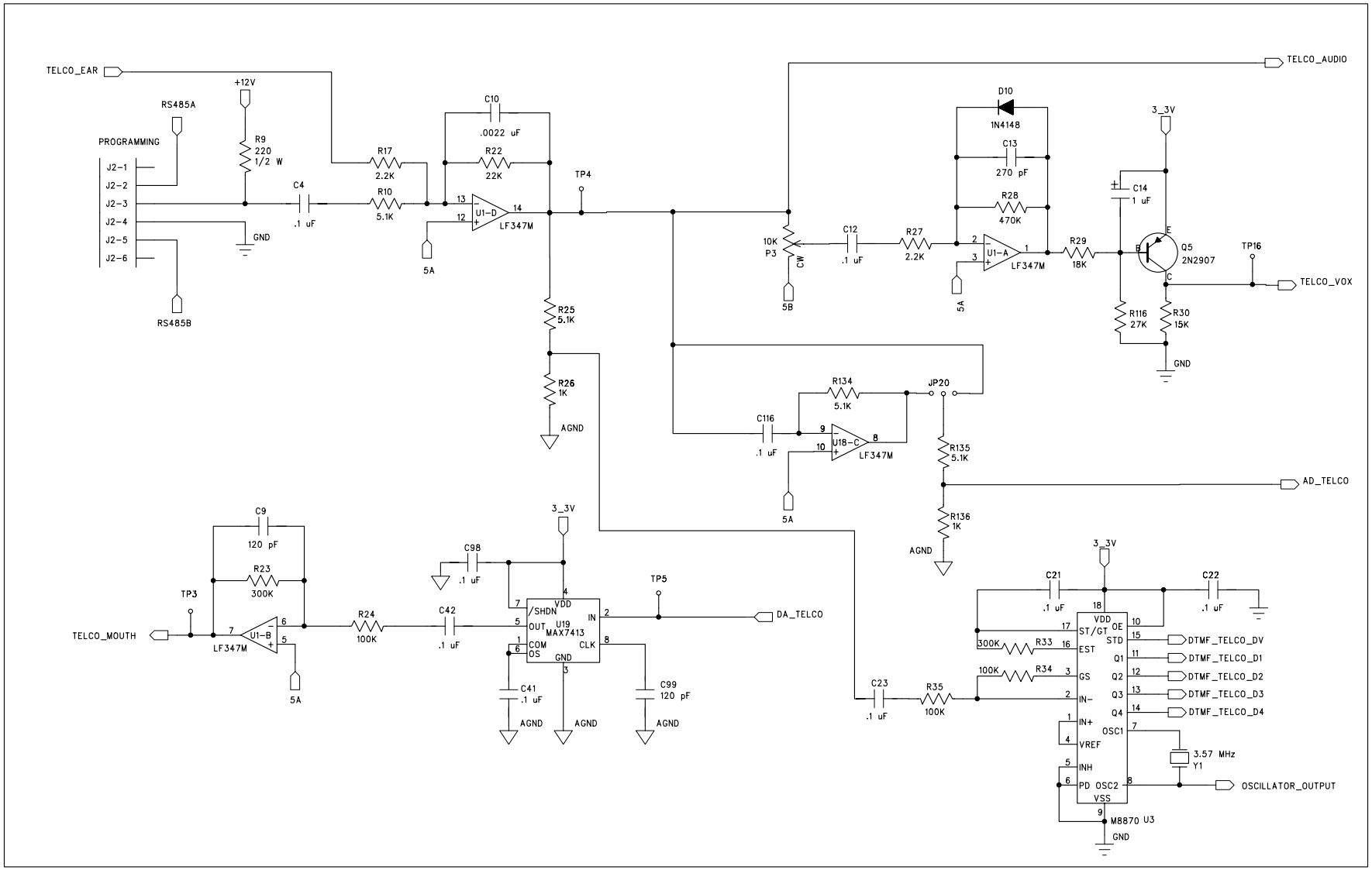
TELCO_EAR
TELCO_AUDIO
+12V
RS485A
PROGRAMMING
J2-1
J2-2
J2-3
J2-4
J2-5
J2-6
RS485B
R9
220
1/2 W
GND
C4
.1 uF
R17
2.2K
R10
5.1K
C10
.0022 uF
R22
22K
U1-D
LF347M
5A
TP4
R25
5.1K
R26
1K
AGND
10K
P3
CW
5B
C12
.1 uF
R27
2.2K
D10
1N4148
C13
270 pF
R28
470K
U1-A
LF347M
R29
18K
3_3V
C14
1 uF
Q5
2N2907
TP16
TELCO_VOX
R116
27K
R30
15K
GND
R134
5.1K
JP20
C116
.1 uF
U18-C
LF347M
R135
5.1K
AD_TELCO
R136
1K
AGND
C9
120 pF
R23
300K
TP3
TELCO_MOUTH
U1-B
LF347M
R24
100K
C42
.1 uF
C98
.1 uF
3_3V
/SHDN
VDD
OUT
U19
MAX7413
COM
OS
GND
IN
CLK
TP5
DA_TELCO
C41
.1 uF
AGND
AGND
C99
120 pF
AGND
C21
.1 uF
C22
.1 uF
3_3V
VDD
ST/GT
OE
STD
EST
Q1
GS
Q2
IN-
Q3
IN+
Q4
VREF
OSC1
INH
PD
OSC2
VSS
M8870 U3
300K
R33
100K
R34
C23
.1 uF
R35
100K
DTMF_TELCO_DV
DTMF_TELCO_D1
DTMF_TELCO_D2
DTMF_TELCO_D3
DTMF_TELCO_D4
3.57 MHz
Y1
OSCILLATOR_OUTPUT
GND

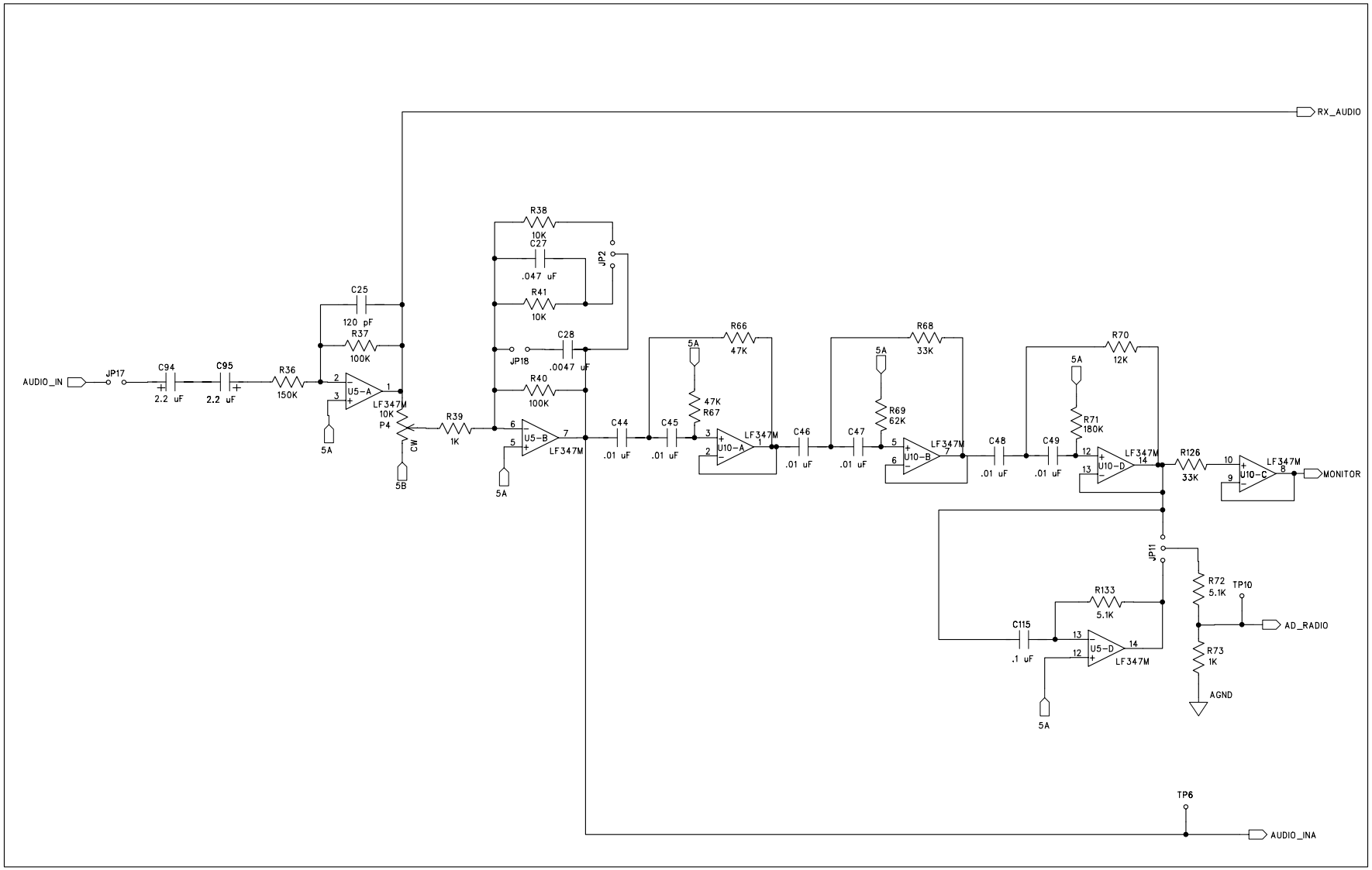
RX_AUDIO
AUDIO_IN
JP17
C94
2.2 uF
C95
2.2 uF
R36
150K
C25
120 pF
R37
100K
U5-A
LF347M
10K
P4
CW
5A
5B
R39
1K
R38
10K
C27
.047 uF
R41
10K
JP2
JP18
C28
.0047 uF
R40
100K
U5-B
LF347M
5A
C44
.01 uF
C45
.01 uF
R66
47K
47K
R67
U10-A
LF347M
C46
.01 uF
C47
.01 uF
R68
33K
R69
62K
U10-B
LF347M
C48
.01 uF
C49
.01 uF
R70
12K
R71
180K
U10-D
LF347M
R126
33K
U10-C
LF347M
MONITOR
JP11
R72
5.1K
TP10
AD_RADIO
R73
1K
AGND
R133
5.1K
C115
.1 uF
U5-D
LF347M
5A
TP6
AUDIO_INA

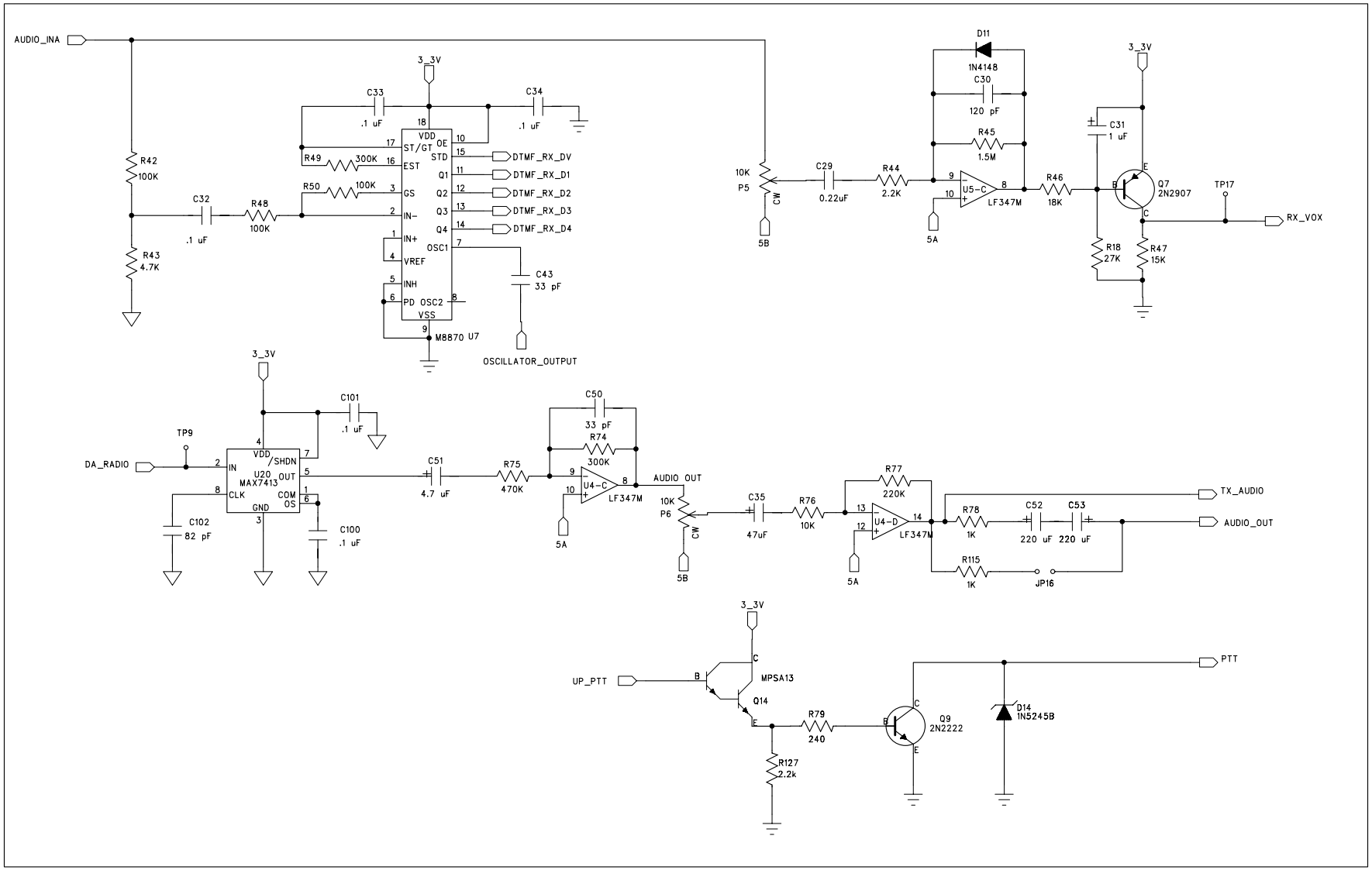
AUDIO_INA
R42
100K
R43
4.7K
C32
.1 uF
R48
100K
R49
300K
R50
100K
C33
.1 uF
C34
.1 uF
3_3V
VDD
ST/GT
EST
GS
IN-
IN+
VREF
INH
PD
OSC2
VSS
OE
STD
Q1
Q2
Q3
Q4
OSC1
M8870 U7
DTMF_RX_DV
DTMF_RX_D1
DTMF_RX_D2
DTMF_RX_D3
DTMF_RX_D4
C43
33 pF
OSCILLATOR_OUTPUT
10K
P5
CW
5B
C29
0.22uF
R44
2.2K
D11
1N4148
C30
120 pF
R45
1.5M
U5-C
LF347M
5A
R46
18K
C31
1 uF
Q7
2N2907
TP17
RX_VOX
R18
27K
R47
15K
TP9
DA_RADIO
C102
82 pF
VDD
/SHDN
IN
U20
MAX7413
OUT
CLK
COM
OS
GND
C100
.1 uF
C101
.1 uF
C51
4.7 uF
R75
470K
C50
33 pF
R74
300K
U4-C
LF347M
AUDIO_OUT
10K
P6
C35
47uF
R76
10K
R77
220K
U4-D
LF347M
R78
1K
C52
220 uF
C53
220 uF
TX_AUDIO
AUDIO_OUT
R115
1K
JP16
UP_PTT
MPSA13
Q14
R127
2.2k
R79
240
Q9
2N2222
D14
1N5245B
PTT